ALSTAR
Industrial
Complex

TH FLAT T85

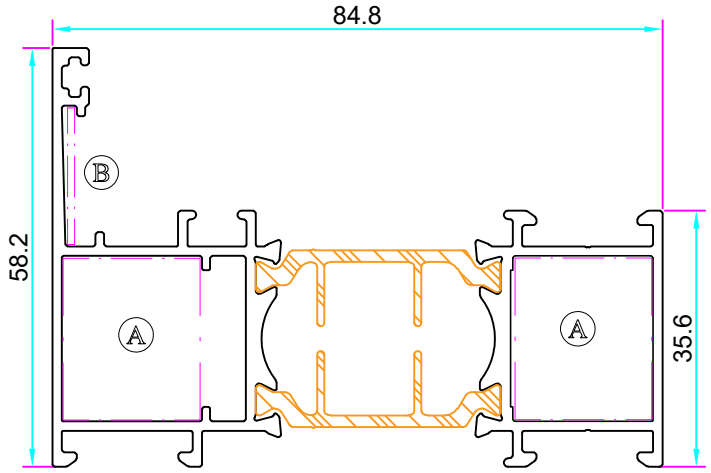

FRAME	Out Code	In Code	Jx	Jy
	11062	11061		
22x19 150117 -19.2mm A	B FUJI 2000	-	G/M	
			1500	

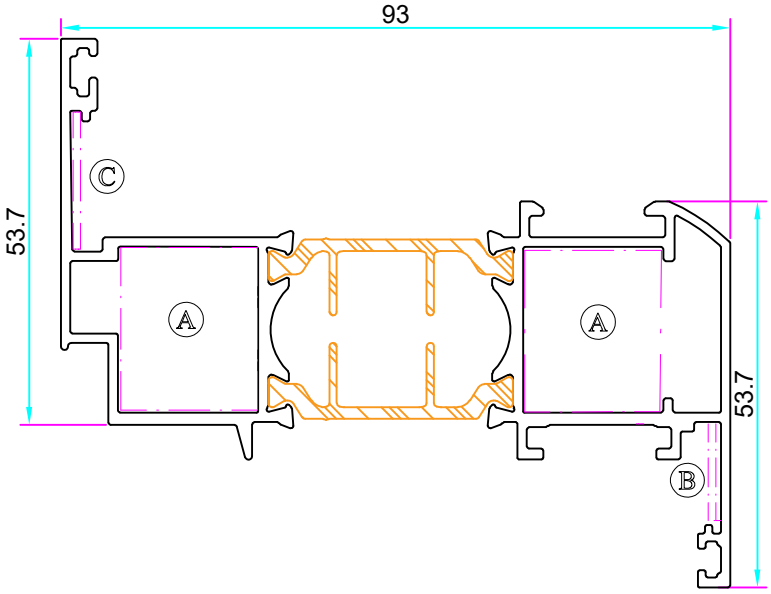

WINDOW SASH Type 1	Out Code	In Code	Jx	Jy
	11066	11065		
22x19 150117 -19.2mm A	B MO20	C FUJI 2000	G/M	
			1660	

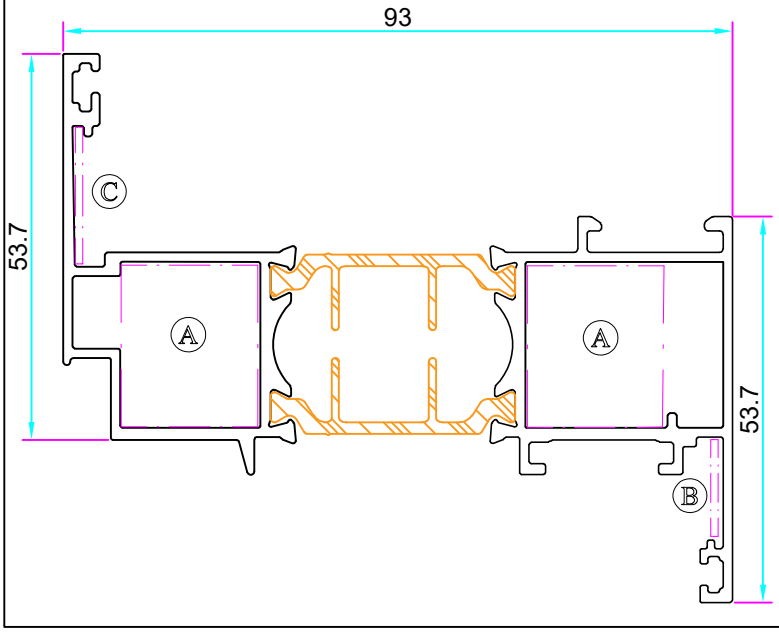

WINDOW SASH Type 2	Out Code	In Code	Jx	Jy
	11066	110621		
22x19 150117 A	B MO20	C FUJI 2000	G/M	
			1660	

ALSTAR
Industrial
Complex

TH FLAT T85

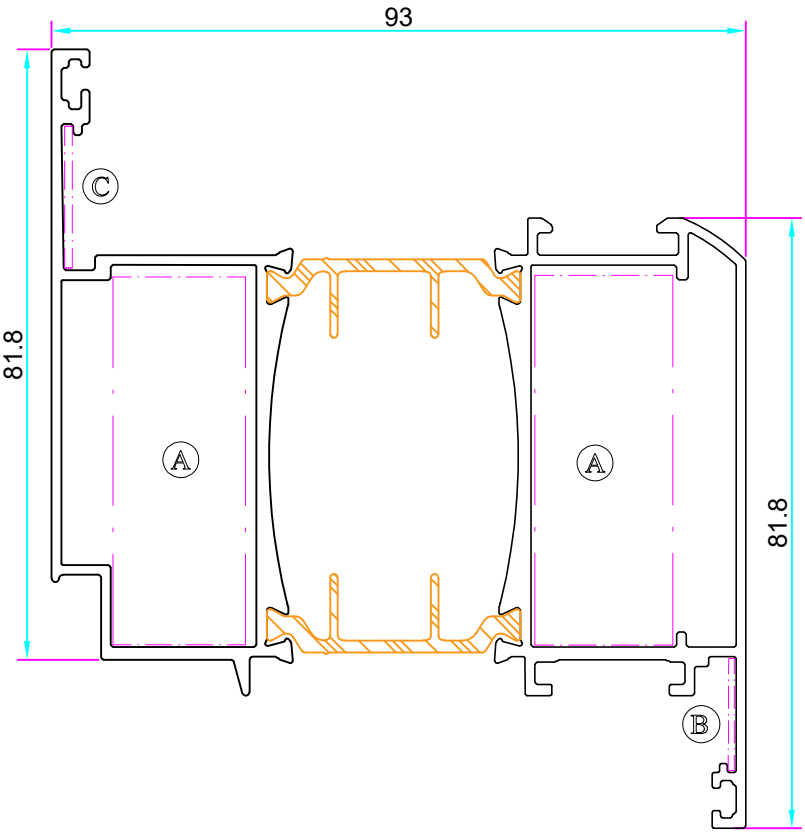

DOOR SASH Type 1	Out Code	In Code	Jx	Jy
	11064	11063		
A 50x19 150121 -19.2mm	B 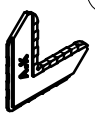 MO20	C FUJI 2000	G/M	
			2160	

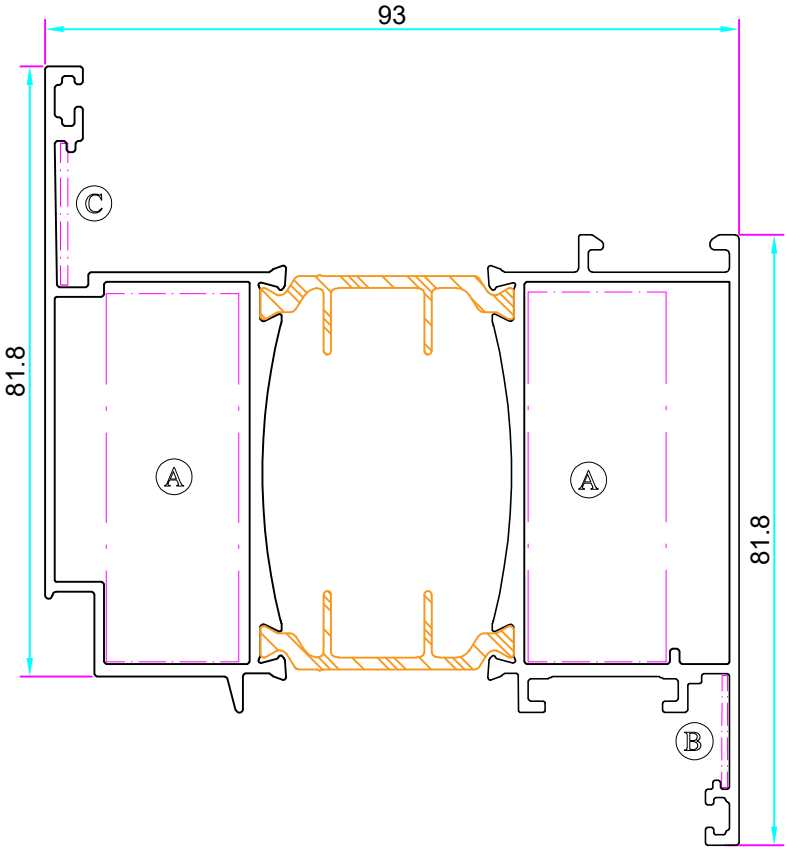

DOOR SASH Type 2	Out Code	In Code	Jx	Jy
	11064	110617		
A 50x19 150121 -19.2mm	B MO20	C FUJI 2000	G/M	
			2160	

ALSTAR
Industrial
Complex

TH FLAT T85

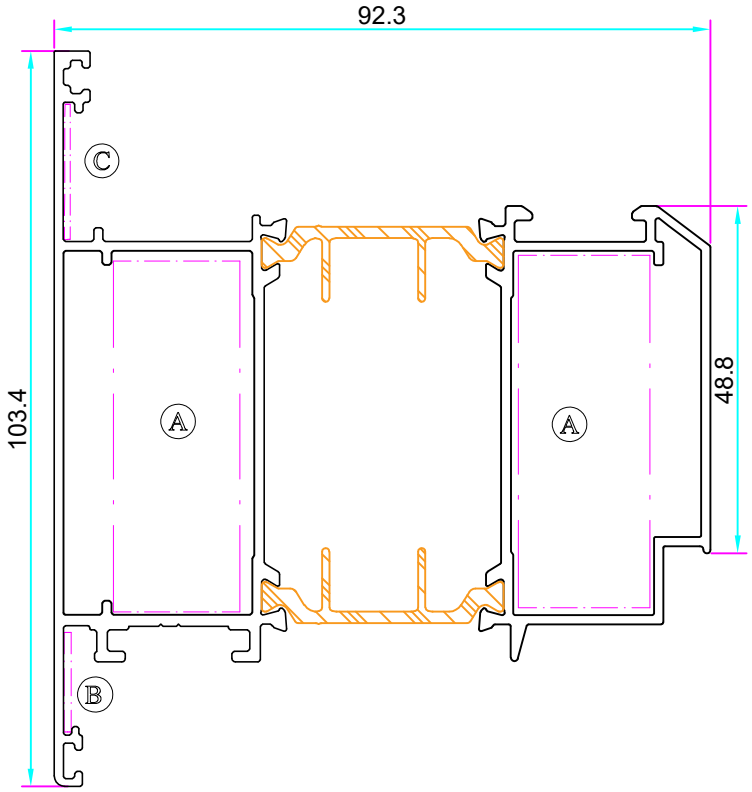

OUTSIDE DOOR SASH	Out Code	In Code	Jx	Jy
	110648	110647		
A 50x19 150121 -19.2mm	B MO20	C FUJI 2000	G/M	
			2080	

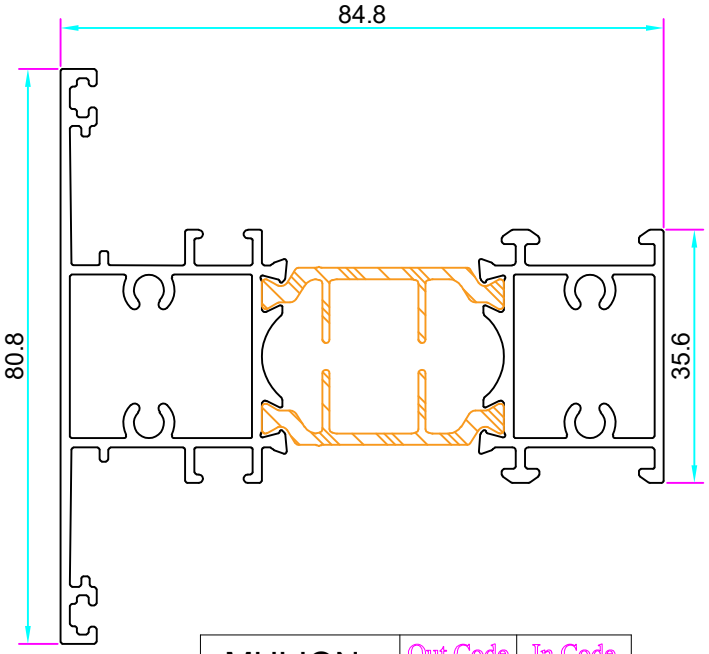

MULION		Out Code	In Code
		11068	11067
Jx	Jy	G/M	
		1830	

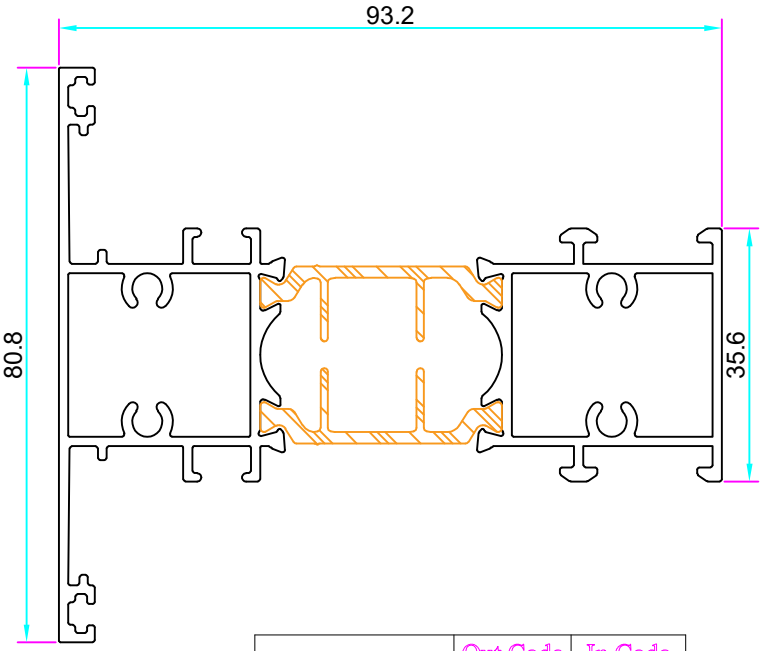

MULION		Out Code	In Code
		11068	110619
Jx	Jy	G/M	
		1900	

ALSTAR
Industrial
Complex

TH FLAT T85

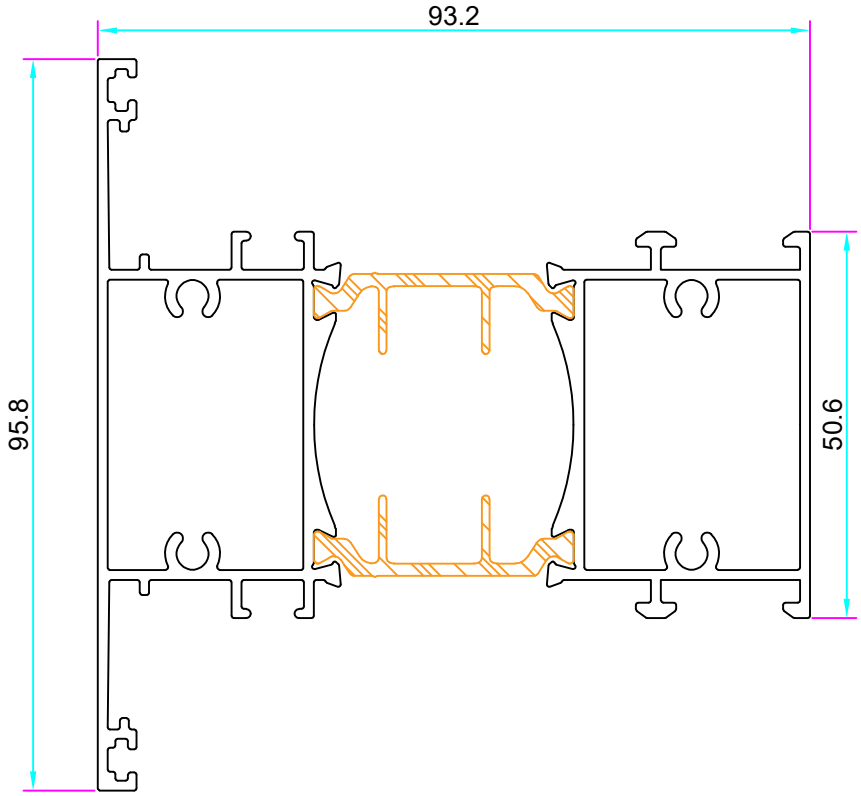

MULION		Out Code	In Code
		110624	110625
Jx	Jy	G/M	
		2230	

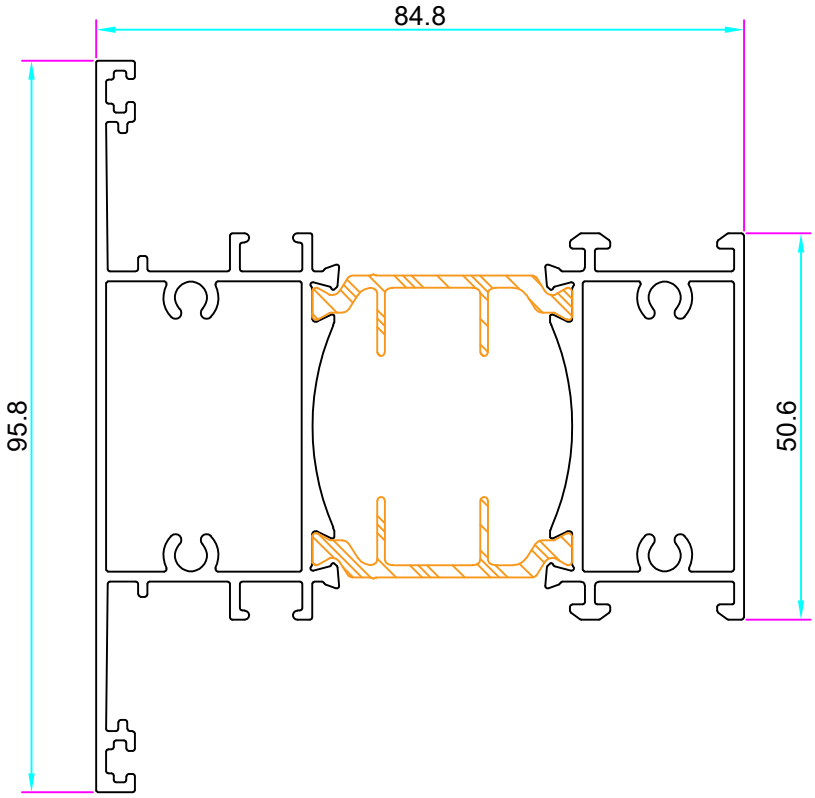

MULION		Out Code	In Code
		110624	110645
Jx	Jy	G/M	
		2130	

ALSTAR
Industrial
Complex

TH FLAT T85

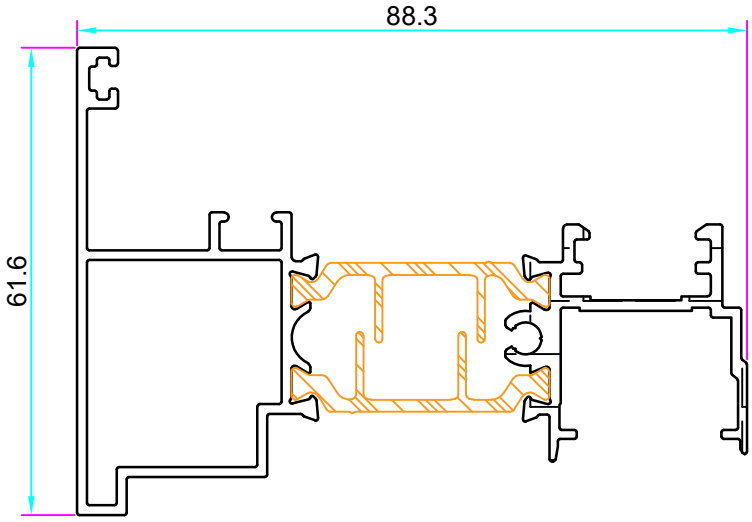

OVERHANG		Out Code	In Code
		110610	11099
Jx	Jy	G/M	
		1450	

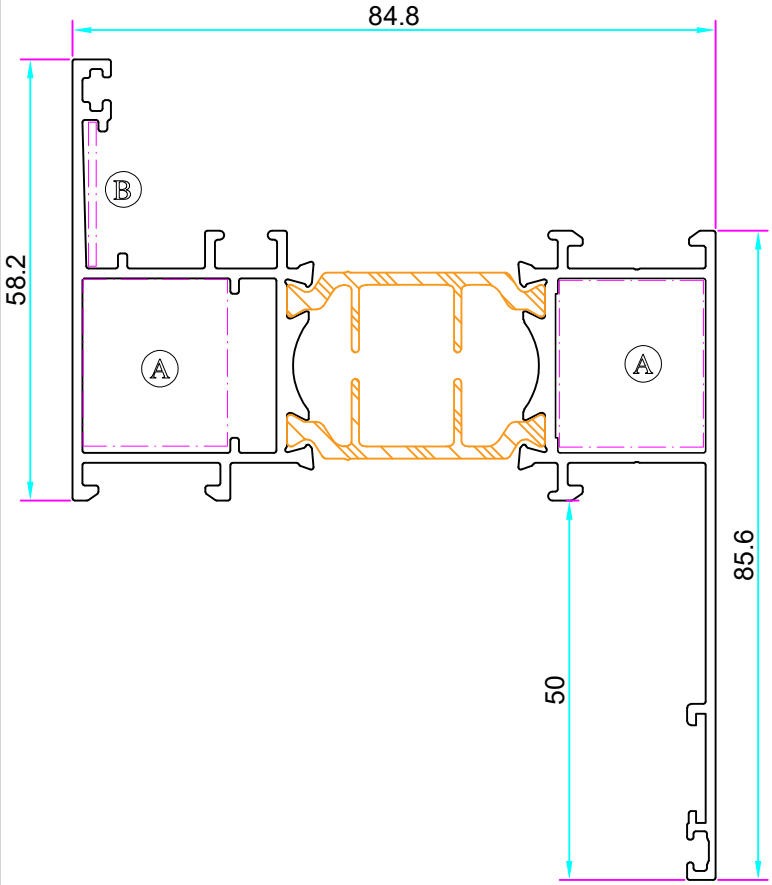

FRAME	Out Code	In Code	Jx	Jy
	11062	110643		
A 22x19 150117 -19.2mm	B FUJI 2000	-	G/M	
			1680	

ALSTAR
Industrial
Complex

TH FLAT T85

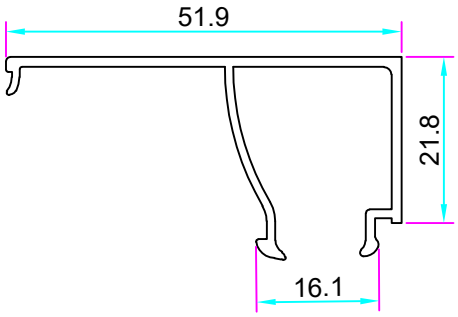

GLAZING		Code
		110613
Jx	Jy	G/M
1	2.3	400

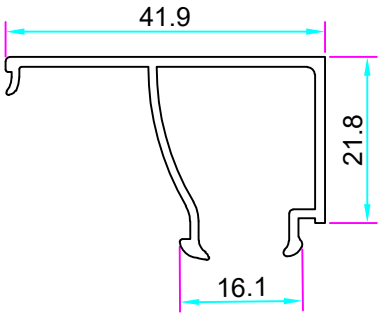

GLAZING		Code
		110611
Jx	Jy	G/M
1	2	380

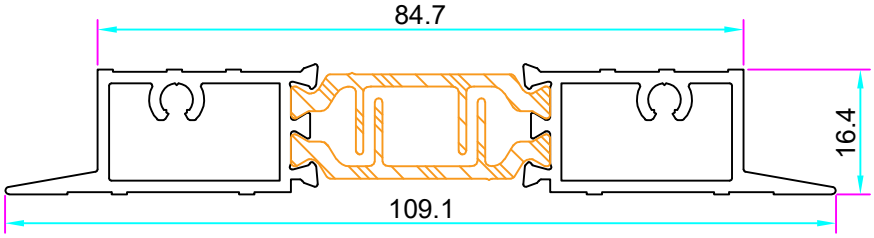

THRESHOLD		Out Code	In Code
		110618	110618
Jx	Jy	G/M	
		1180	

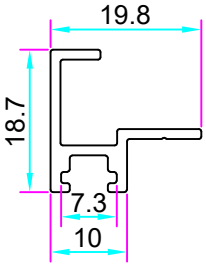

INTERCELL		Code
		110612
Jx	Jy	G/M
		210

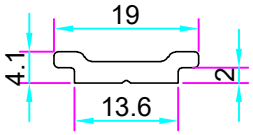

TIJ		Code
		150126
Jx	Jy	G/M
		147

ALSTAR Industrial Complex

TH FLAT T85

Frame	Jx (cm)^4	Jy (cm)^4	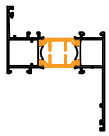	Glazing	Jx (cm)^4	Jy (cm)^4	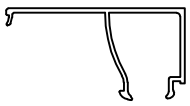
110602-110643	Gr / Metr			110613	Gr / Metr		
	1680				400		
Frame	Jx (cm)^4	Jy (cm)^4	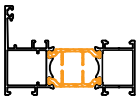	Glazing	Jx (cm)^4	Jy (cm)^4	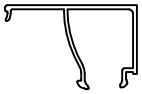
11062-11061	Gr / Metr			110611	Gr / Metr		
	1500				380		
Window Sash Type 1	Jx (cm)^4	Jy (cm)^4	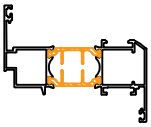	Threshold	Jx (cm)^4	Jy (cm)^4	
11066-11065	Gr / Metr			110618-110618	Gr / Metr		
	1660				1180		
Window Sash Type 2	Jx (cm)^4	Jy (cm)^4	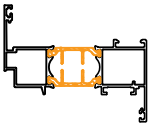	Intercell	Jx (cm)^4	Jy (cm)^4	
11066-110621	Gr / Metr			110612	Gr / Metr		
	1660				210		
Door Sash Type 1	Jx (cm)^4	Jy (cm)^4	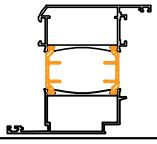	Wall Cover	Jx (cm)^4	Jy (cm)^4	
11064-11063	Gr / Metr			150124	Gr / Metr		
	2160				380		
Door Sash Type 2	Jx (cm)^4	Jy (cm)^4	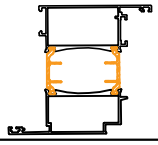	Wall Cover	Jx (cm)^4	Jy (cm)^4	
11064-110617	Gr / Metr			150143	Gr / Metr		
	2160				345		
Outside Door Sash	Jx (cm)^4	Jy (cm)^4	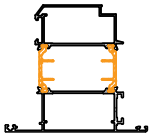	Wall Cover	Jx (cm)^4	Jy (cm)^4	
110648-110647	Gr / Metr			150123	Gr / Metr		
	2080				300		
Mulion	Jx (cm)^4	Jy (cm)^4	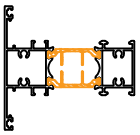	Wall Cover	Jx (cm)^4	Jy (cm)^4	
11068-11067	Gr / Metr			150112	Gr / Metr		
	1830				420		
Mulion	Jx (cm)^4	Jy (cm)^4	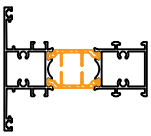	Wall Cover	Jx (cm)^4	Jy (cm)^4	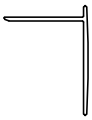
11068-110619	Gr / Metr			15015	Gr / Metr		
	1900				400		
Mulion	Jx (cm)^4	Jy (cm)^4	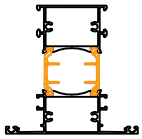	Wall Cover	Jx (cm)^4	Jy (cm)^4	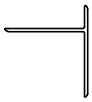
110624-110625	Gr / Metr			150113	Gr / Metr		
	2230				310		
Mulion	Jx (cm)^4	Jy (cm)^4	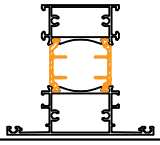	Wall Cover	Jx (cm)^4	Jy (cm)^4	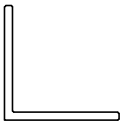
110624-110645	Gr / Metr			150111	Gr / Metr		
	2130				1010		
Overhang	Jx (cm)^4	Jy (cm)^4	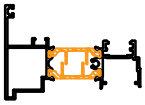	Wall Cover	Jx (cm)^4	Jy (cm)^4	
110610-11099	Gr / Metr			150110	Gr / Metr		
	1450				480		
TIJ	Jx (cm)^4	Jy (cm)^4	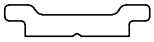		Jx (cm)^4	Jy (cm)^4	
150126	Gr / Metr				Gr / Metr		
	147						

ALSTAR
Industrial
Complex

TH FLAT T85

Code	B 160		Code	B 813	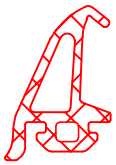
Location	Glazing		Location	Frame & Mulion	
Usage	Glass Clipper		Usage	Thermal Insulation	
Material	EPDM		Material	EPDM	
Code	B 152		Code	MO20	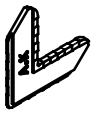
Location	Glazing		Location	Sash	
Usage	Glass Clipper		Usage	Corner setting	
Material	EPDM		Material	Plastic	
Code	B 152 - 4mm		Code	FUJI 2000	
Location	Glazing		Location	Frame & Sash	
Usage	Glass Clipper		Usage	Corner setting	
Material	EPDM		Material	Metal	
Code	B 152 - 5mm		Code	22x19	
Location	Glazing		Location	Frame & Sash	
Usage	Glass Clipper		Usage	Corner Clit	
Material	EPDM		Material	Aluminium	
Code	B 152 - 8mm	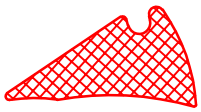	Code	150117	
Location	Glazing		Location	Frame & Sash	
Usage	Glass Clipper		Usage	Corner Clamp	
Material	EPDM		Material	Aluminium	
Code	B 729		Code	50x19	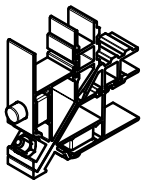
Location	Frame & Sash & Mulion		Location	Door Frame & Sash	
Usage	Glass Clipper		Usage	Corner Clit	
Material	EPDM		Material	Aluminium	
Code	B 680		Code	150121	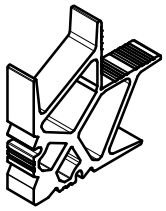
Location	Frame & Sash & Mulion		Location	Door Frame & Sash	
Usage	Bumper		Usage	Corner Clamp	
Material	EPDM		Material	Aluminium	
Code	B 802		Code	150126	
Location	Frame & Mulion		Location	Sash	
Usage	Bumper		Usage	Lock up	
Material	EPDM		Material	Aluminium	

ALSTAR
Industrial
Complex

TH FLAT T85

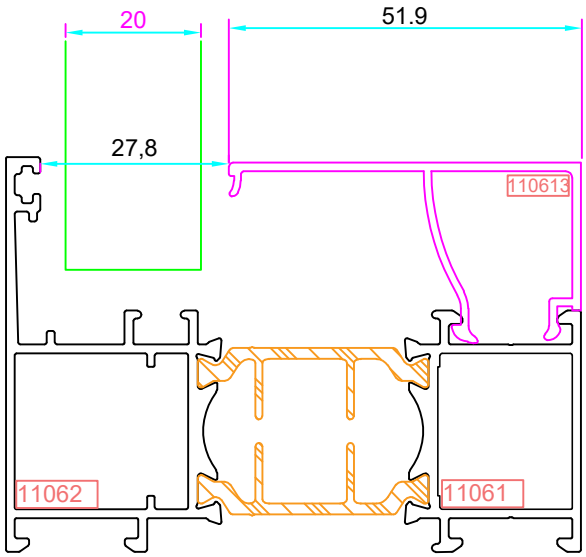

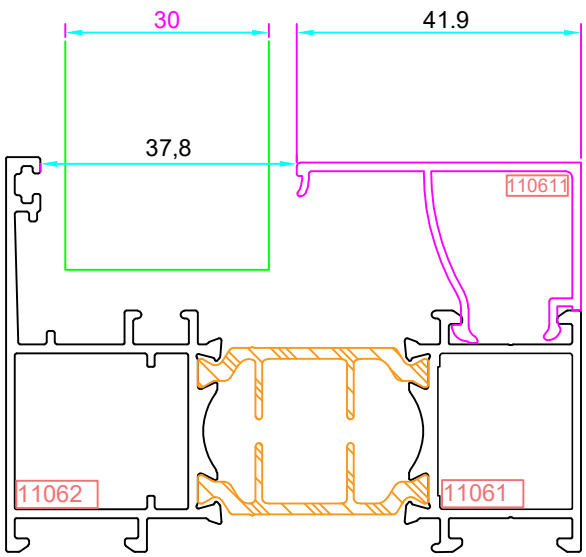

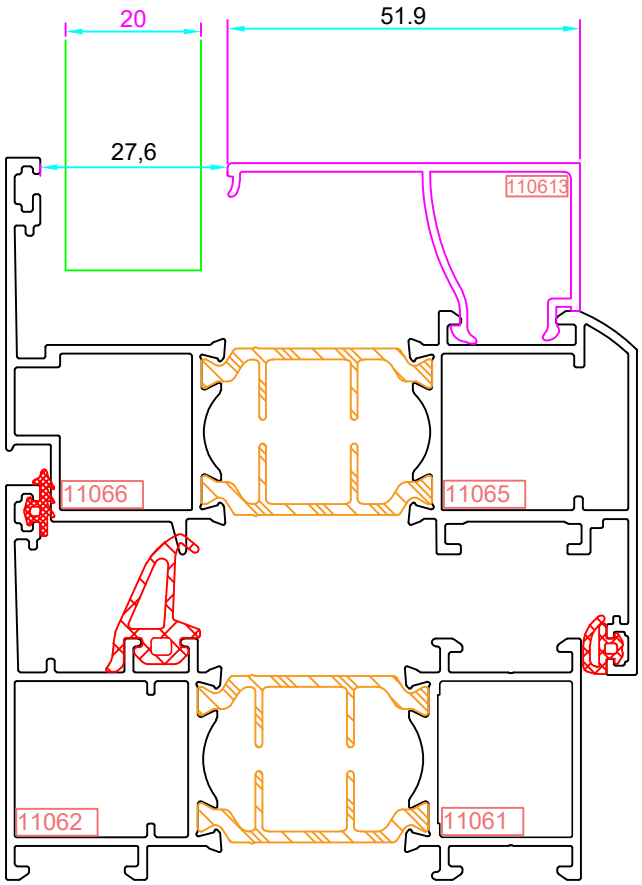

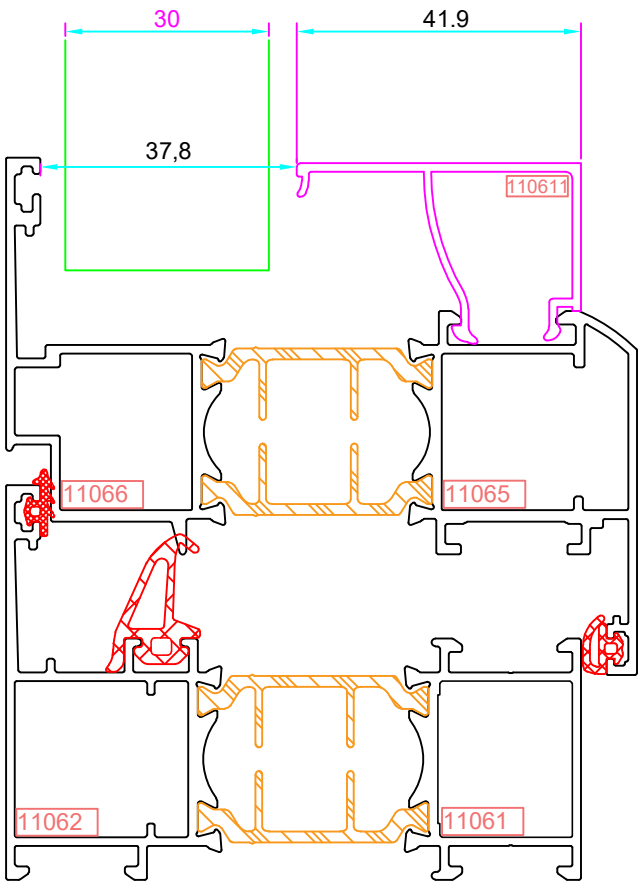

ALSTAR
Industrial
Complex

TH FLAT T85

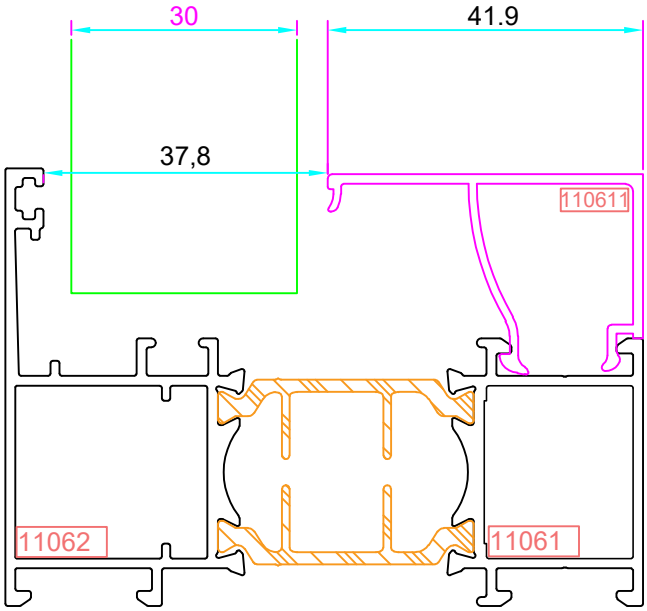

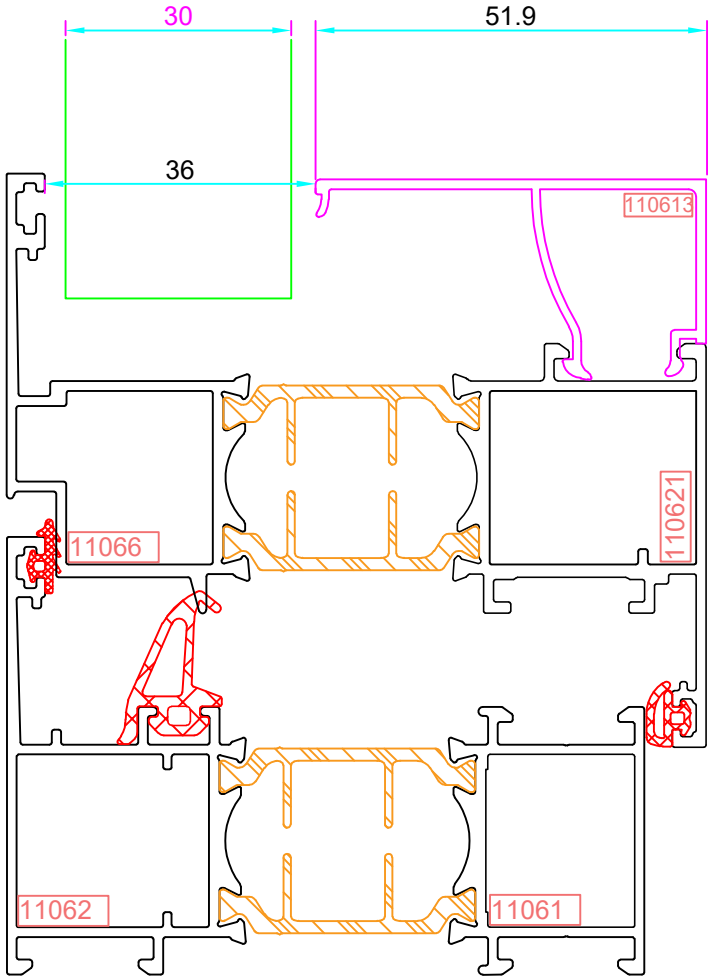

ALSTAR
Industrial
Complex

TH FLAT T85

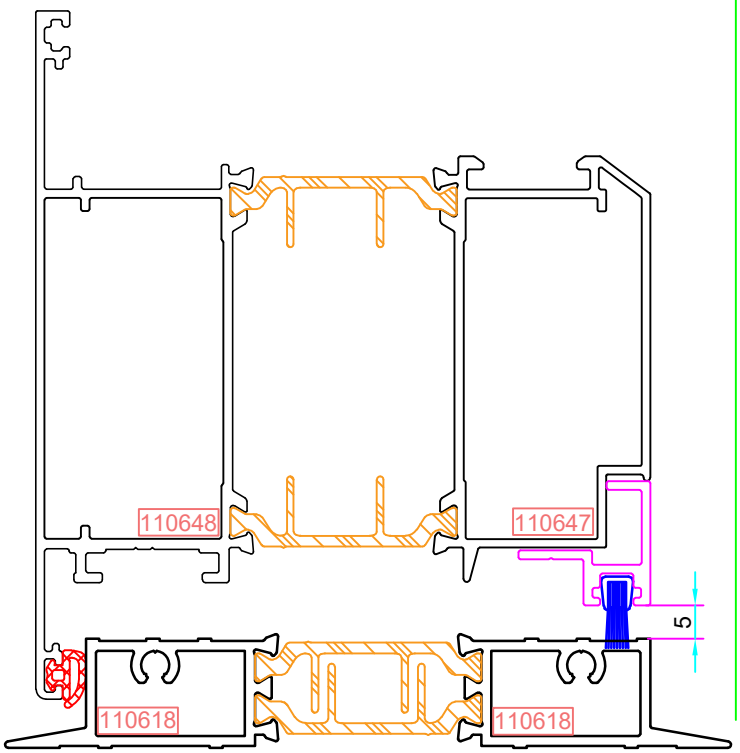

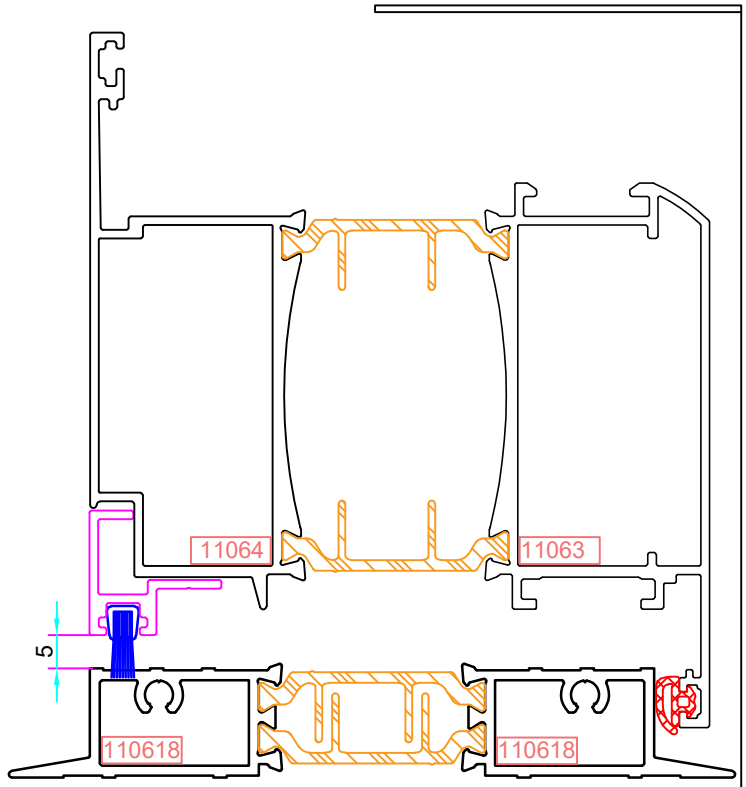

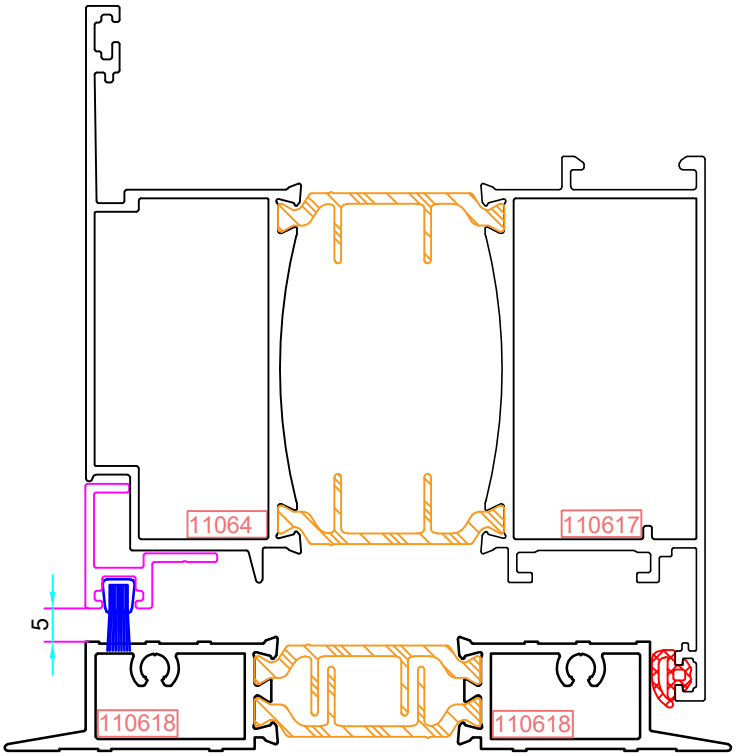

ALSTAR
Industrial
Complex

TH FLAT T85

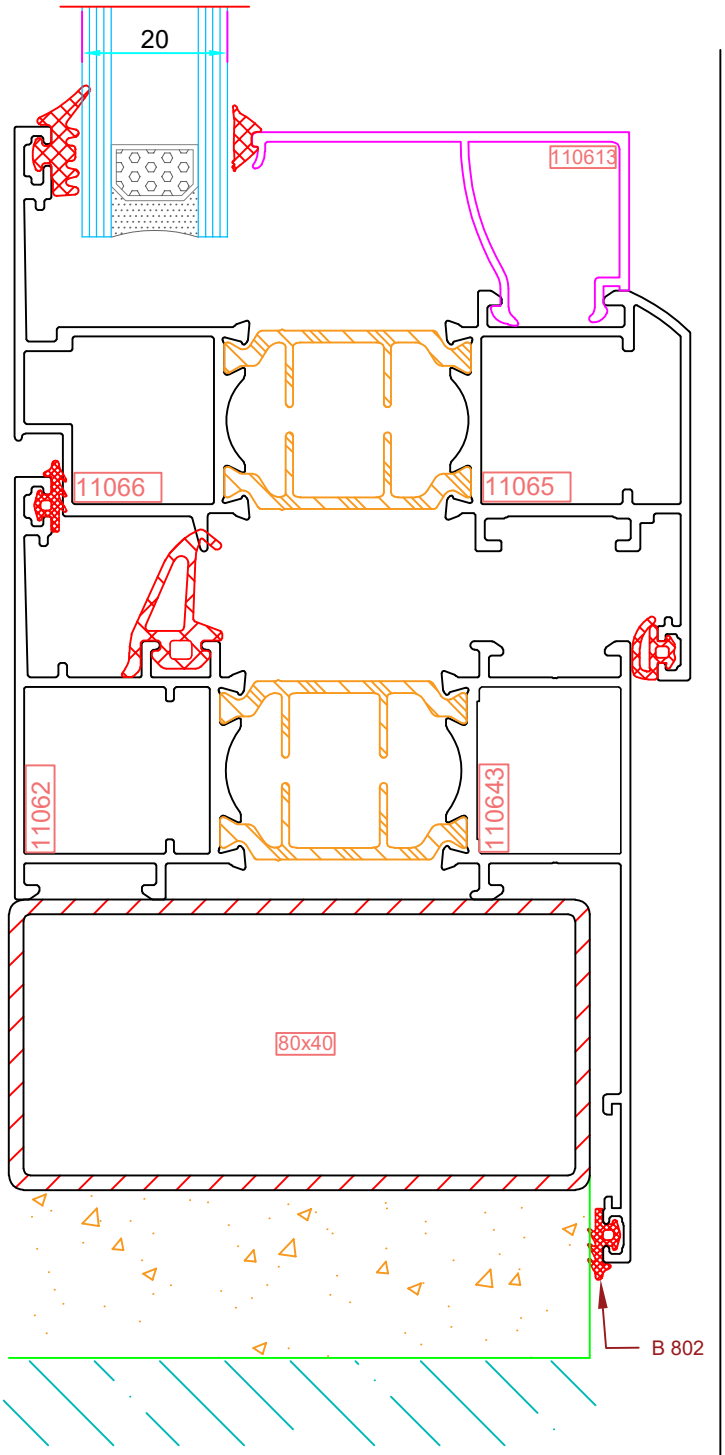

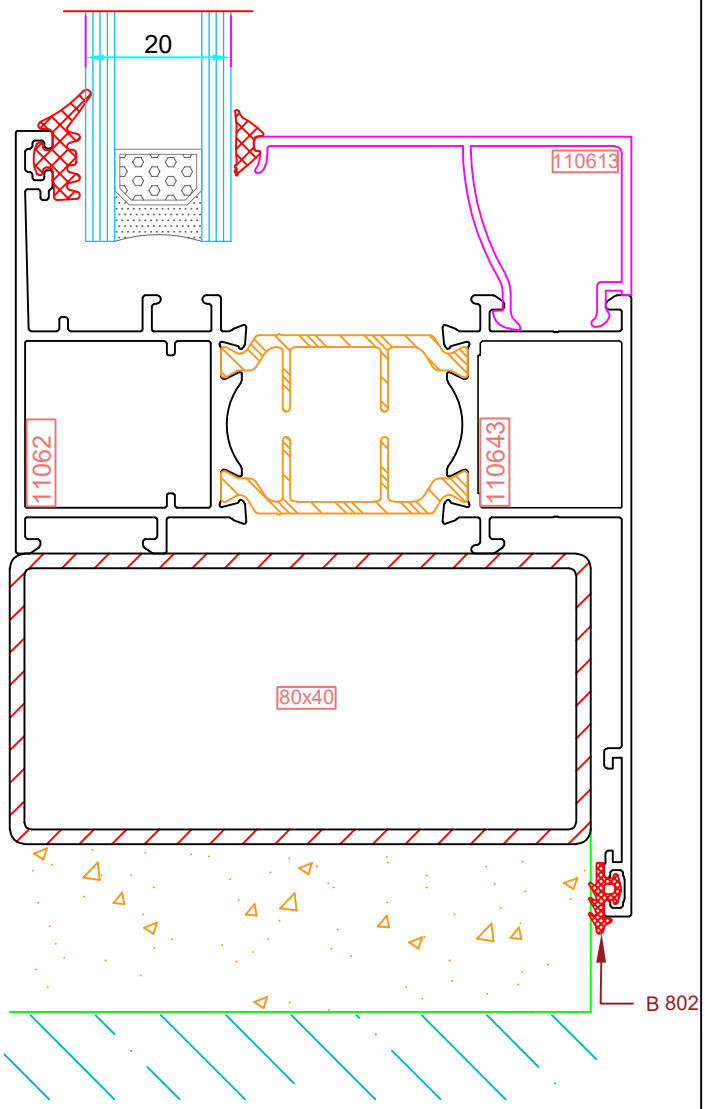

ALSTAR
Industrial
Complex

TH FLAT T85

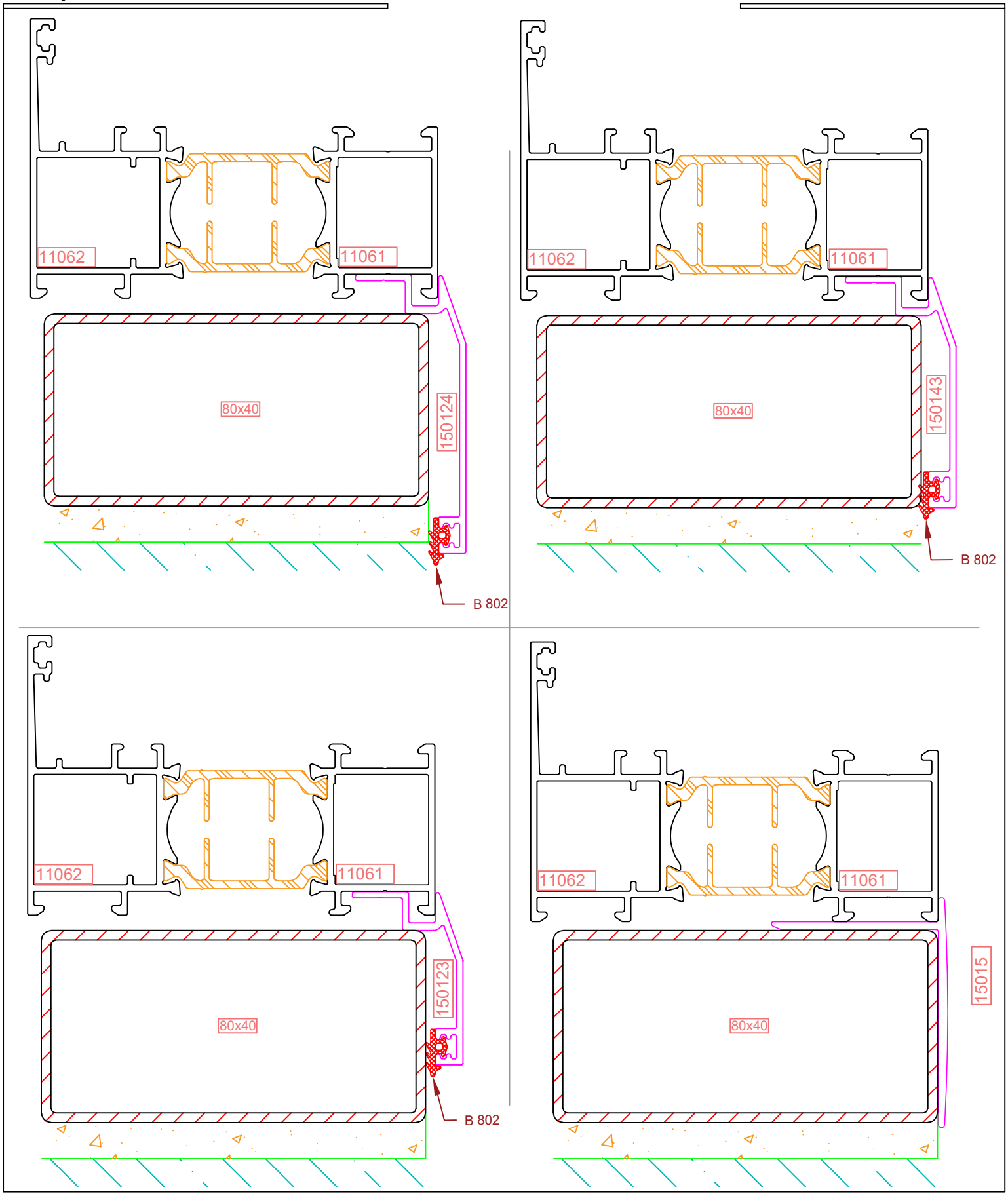

ALSTAR
Industrial
Complex

TH FLAT T85

Sash Type 1

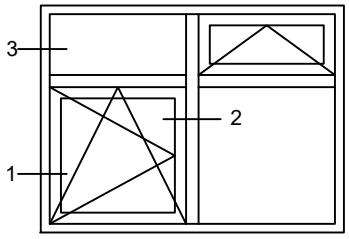

1

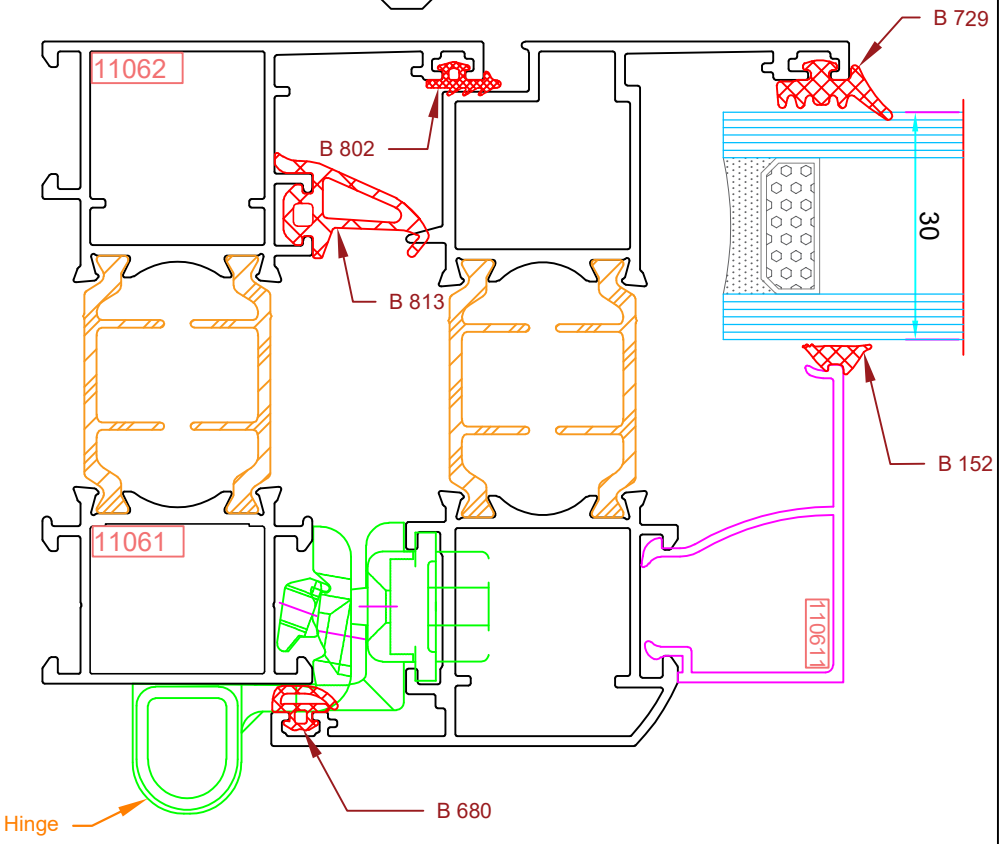

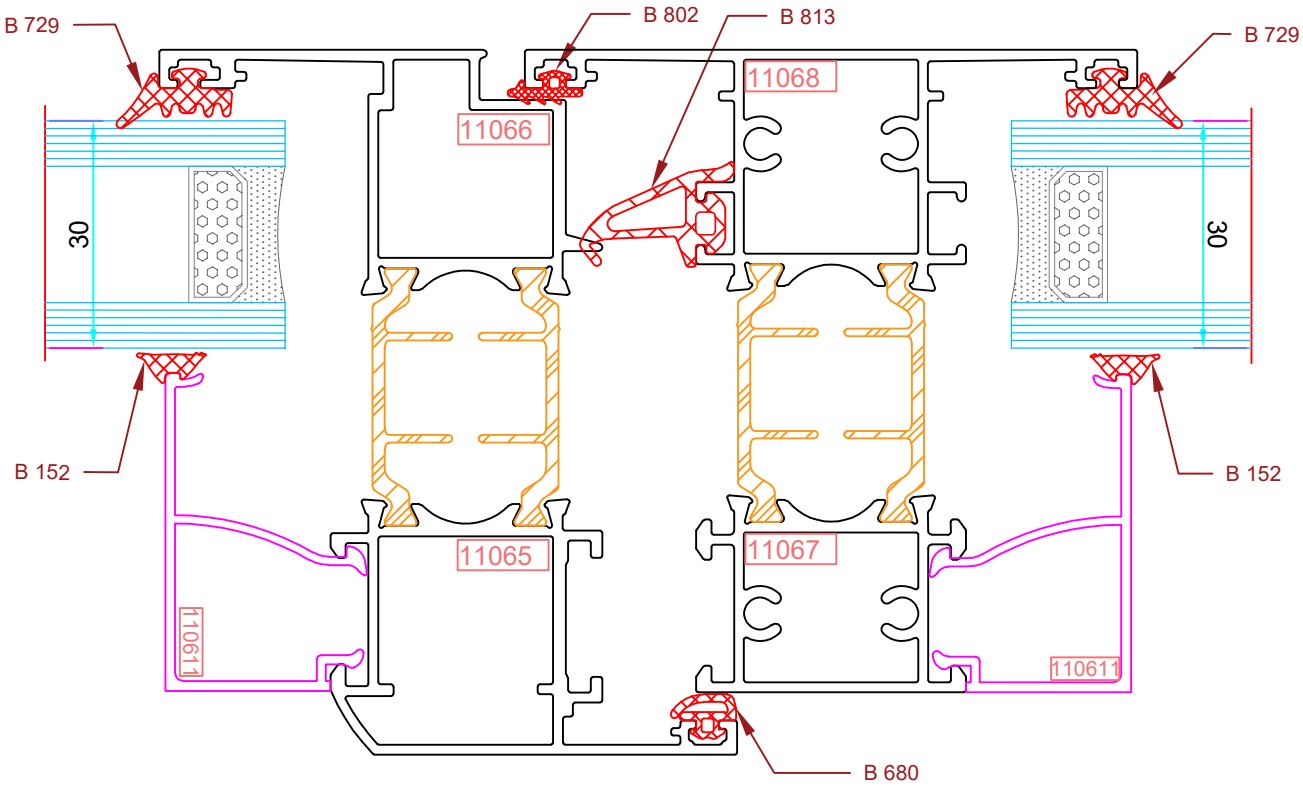

2

ALSTAR
Industrial
Complex

TH FLAT T85

Sash Type 2

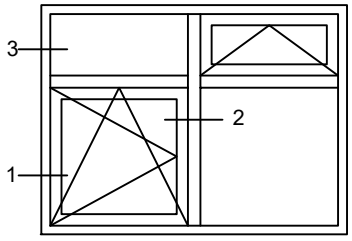

1

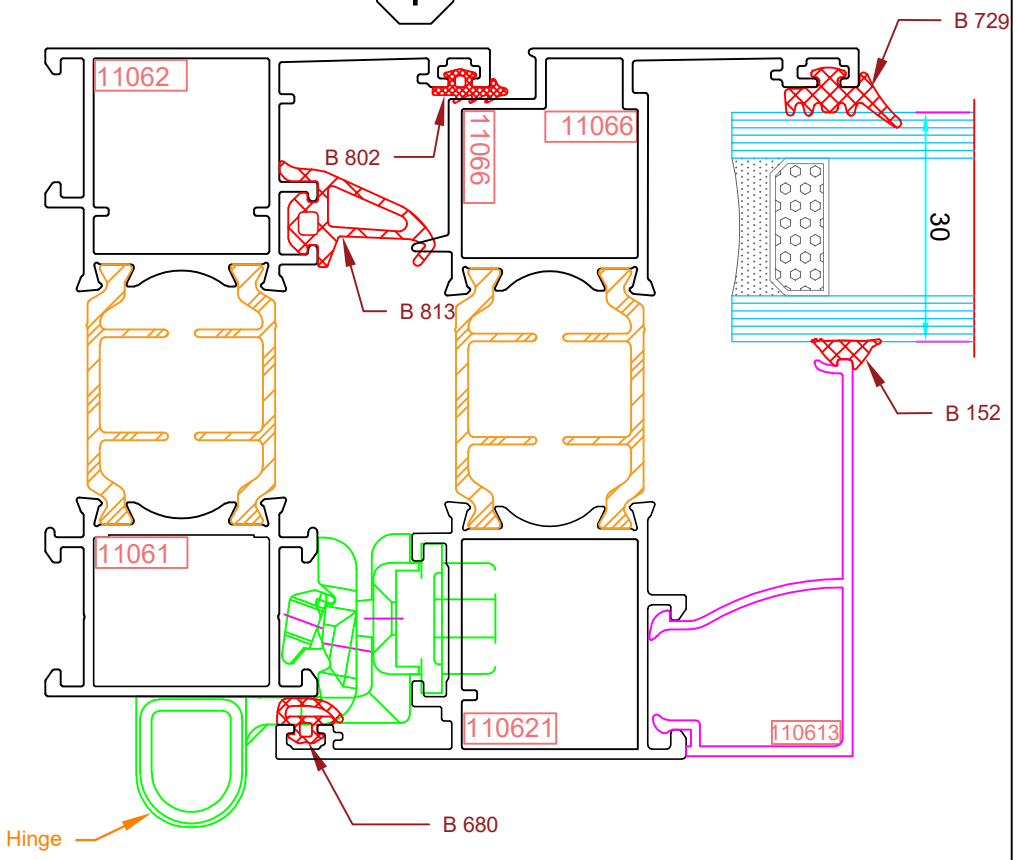

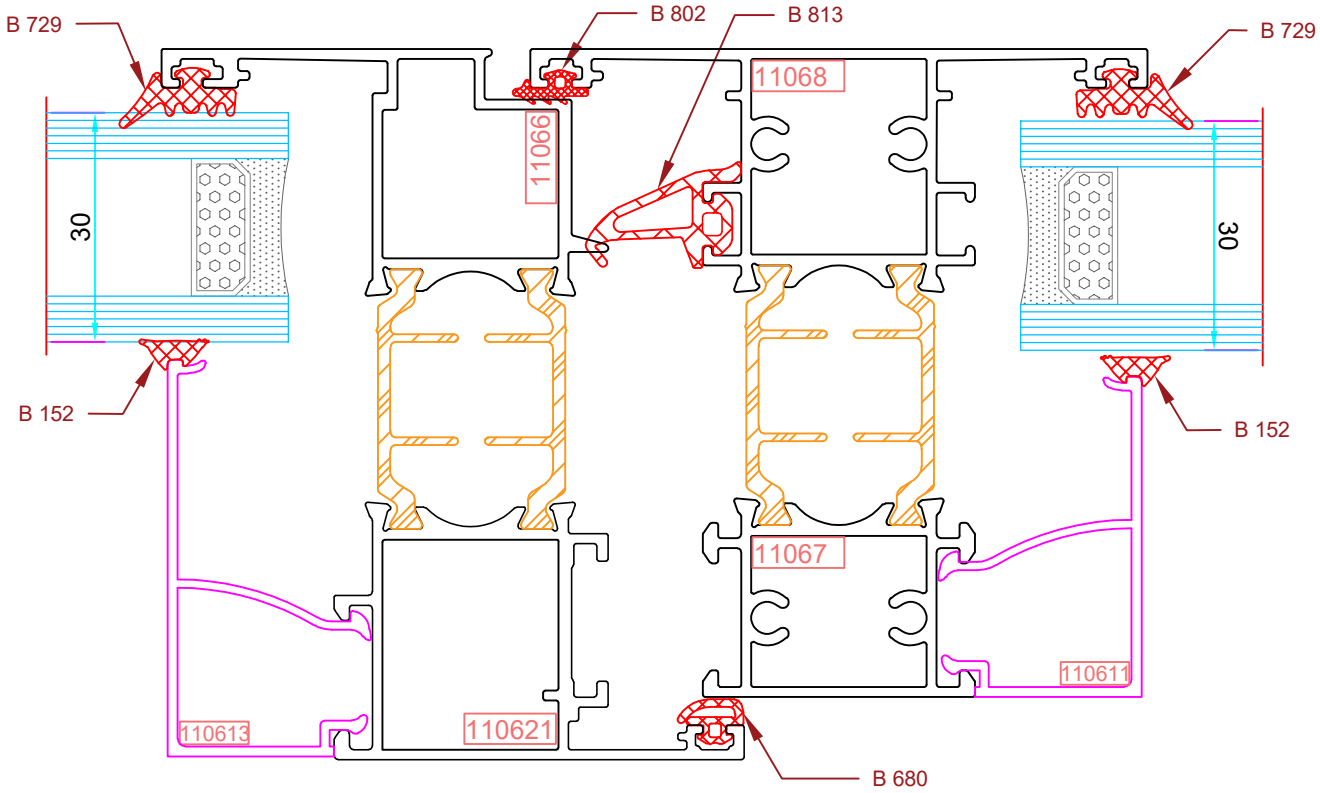

2

ALSTAR
Industrial
Complex

TH FLAT T85

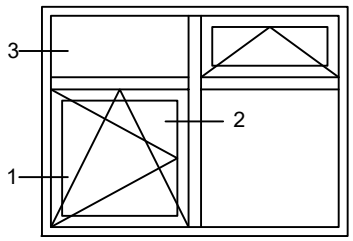

3

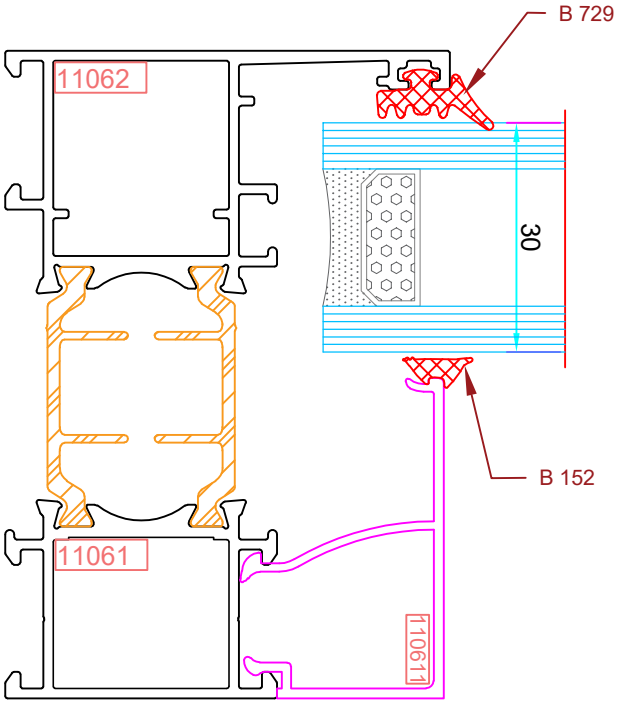

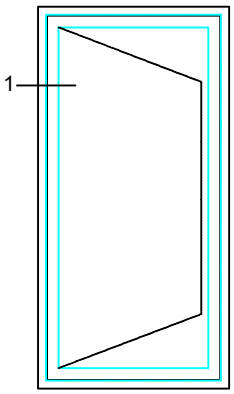

1

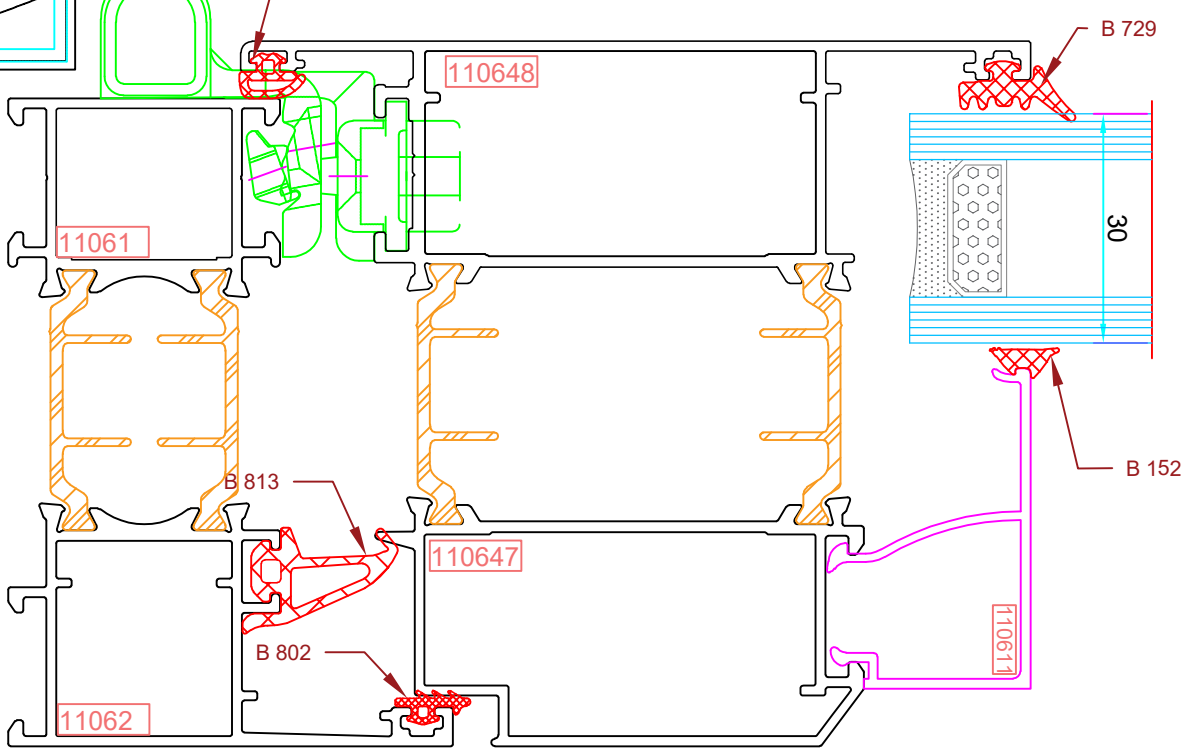

ALSTAR
Industrial
Complex

TH FLAT T85

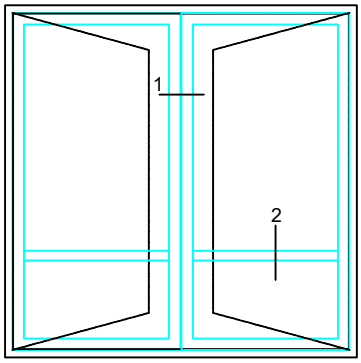

1

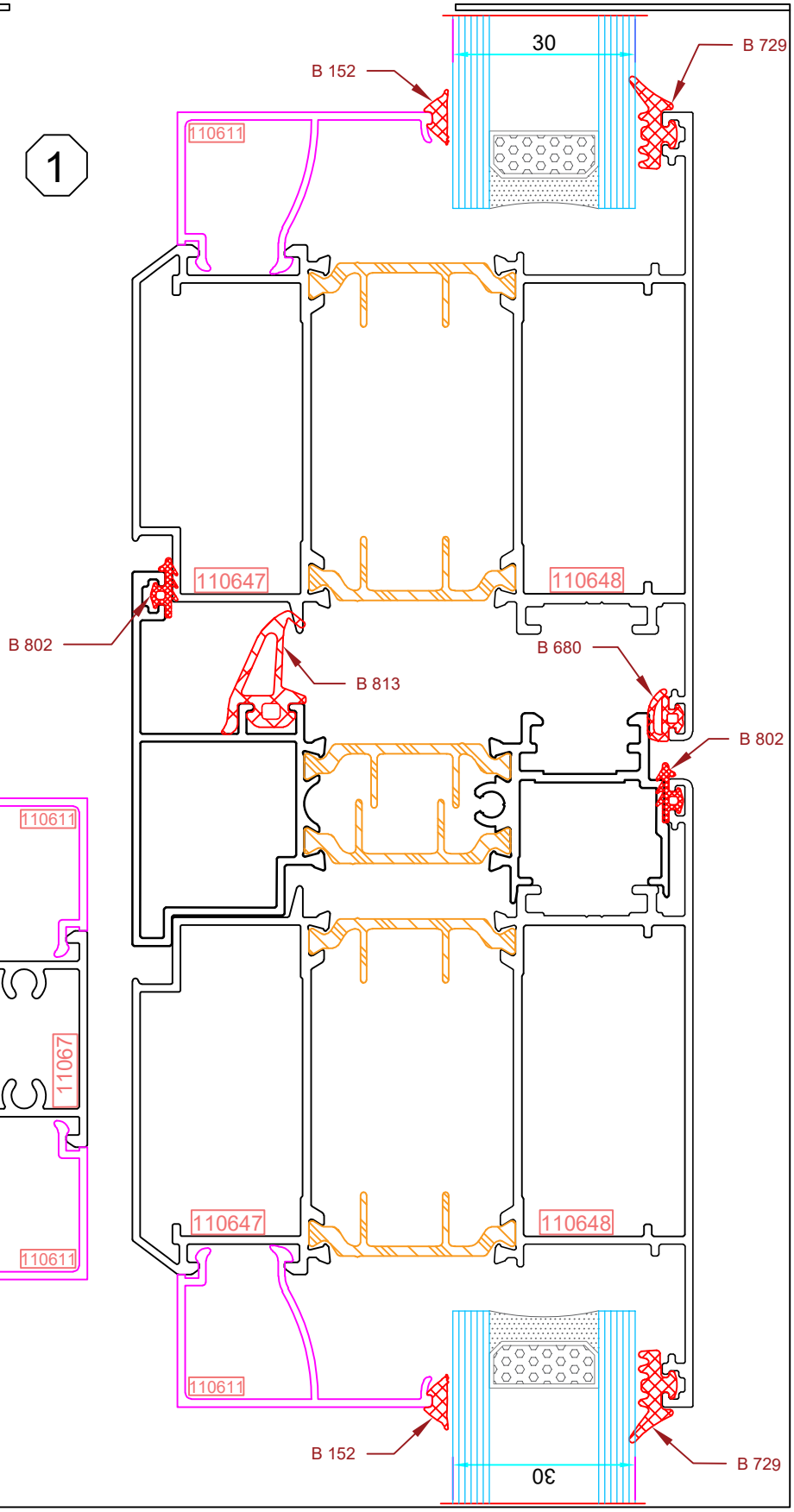

2

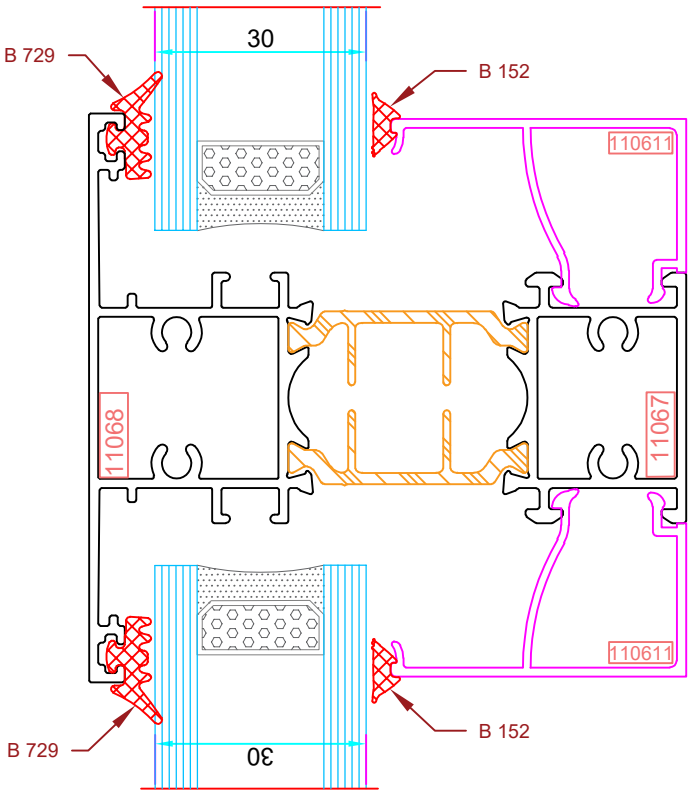

ALSTAR
Industrial
Complex

TH FLAT T85

Sash Type 1

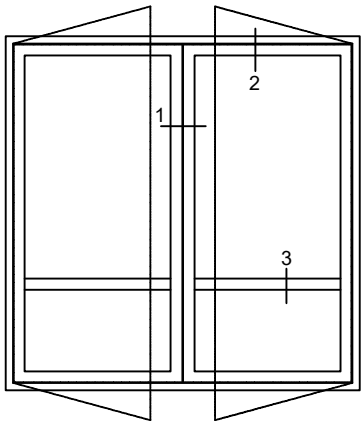

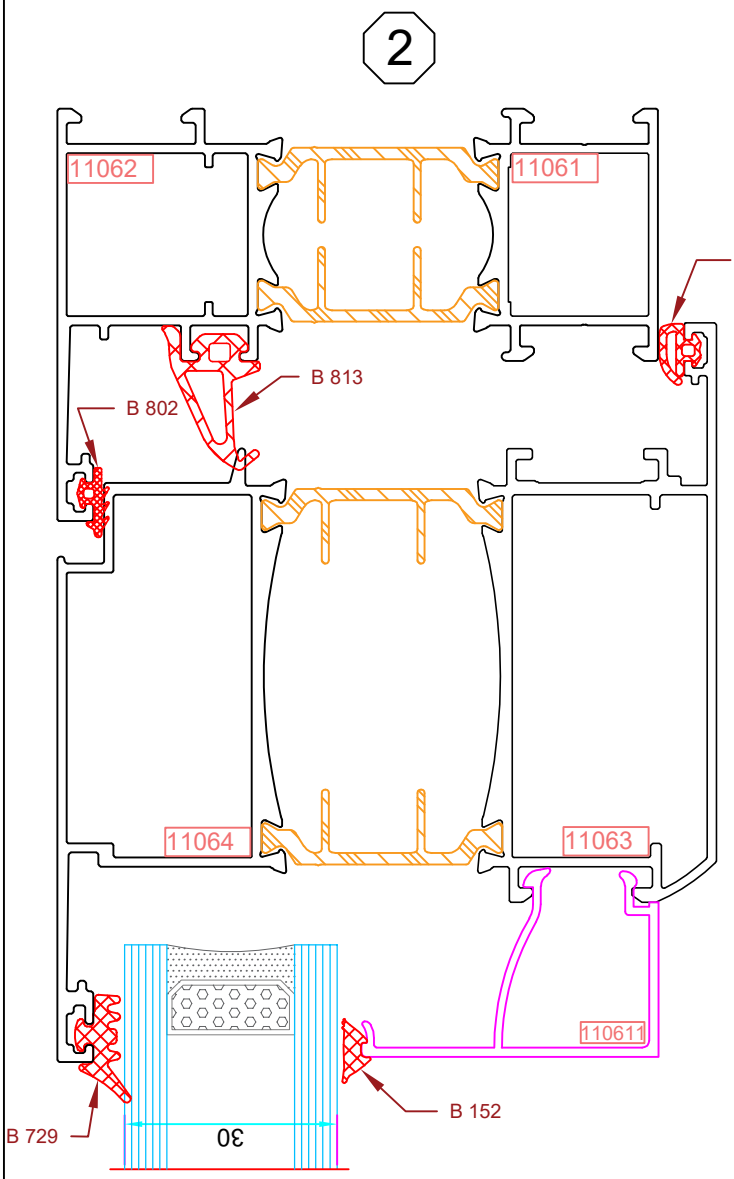

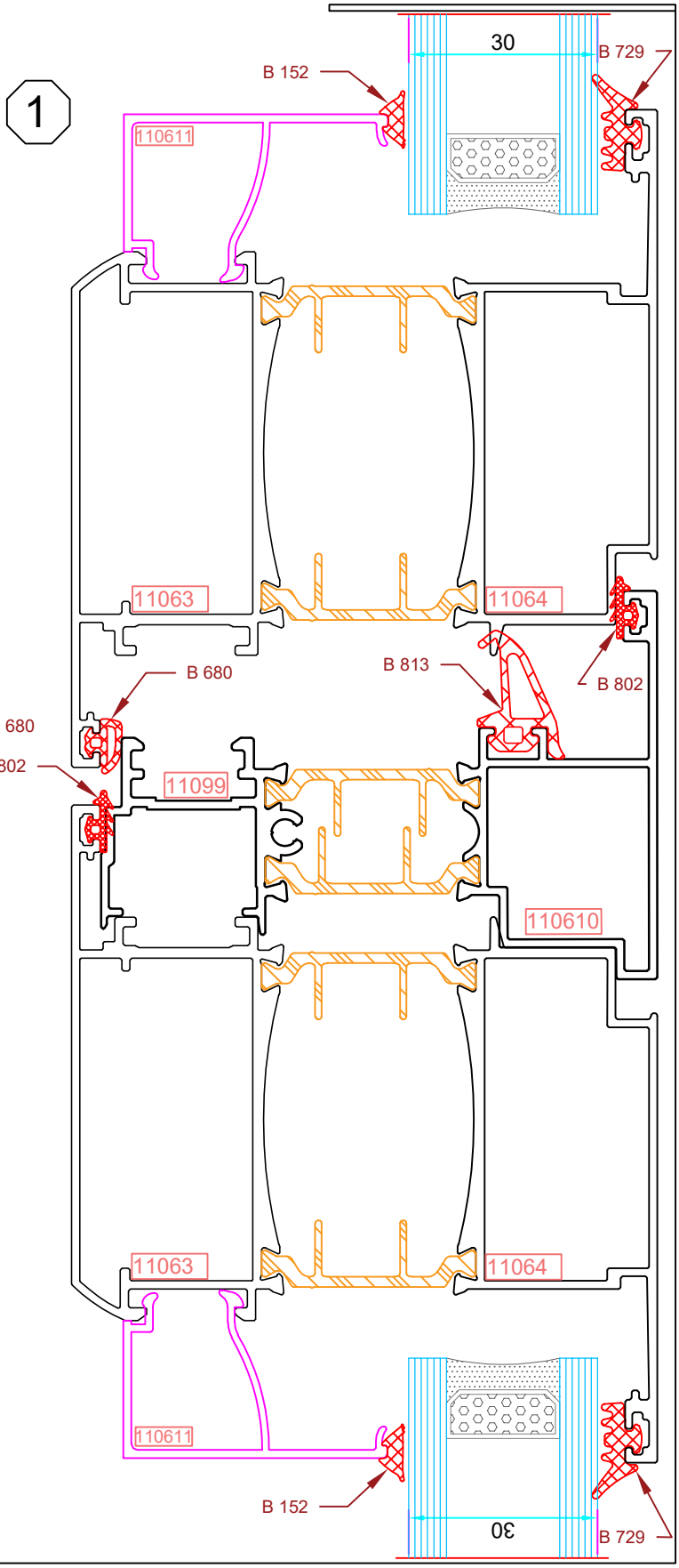

ALSTAR
Industrial
Complex

TH FLAT T85

Sash Type 2

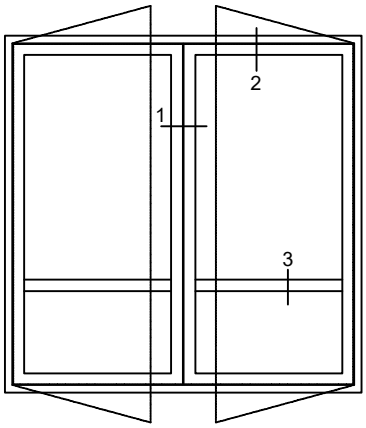

1

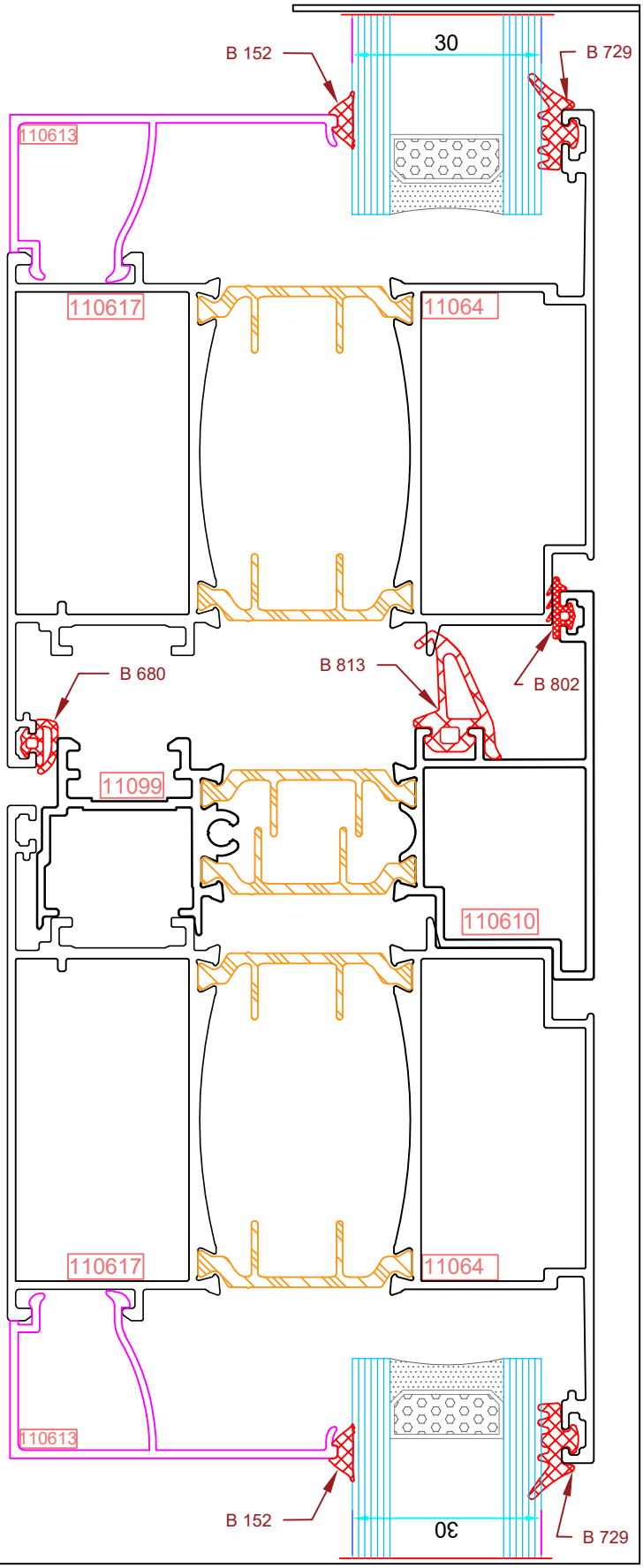

2

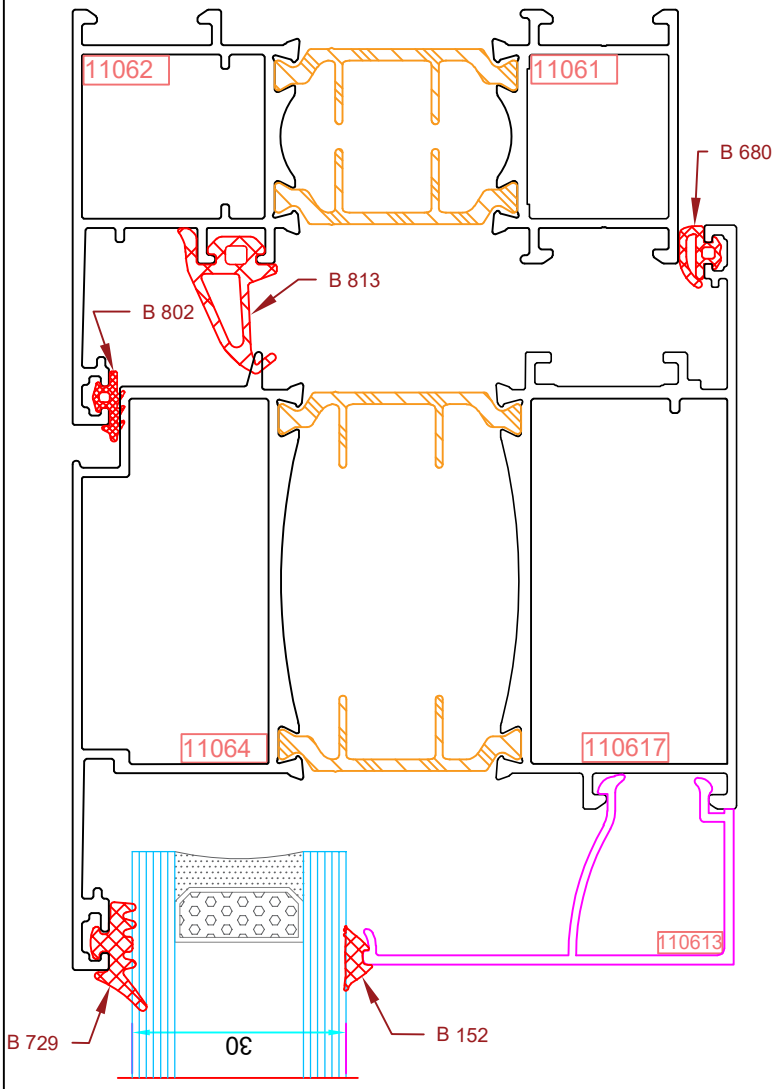

ALSTAR
Industrial
Complex

TH FLAT T85

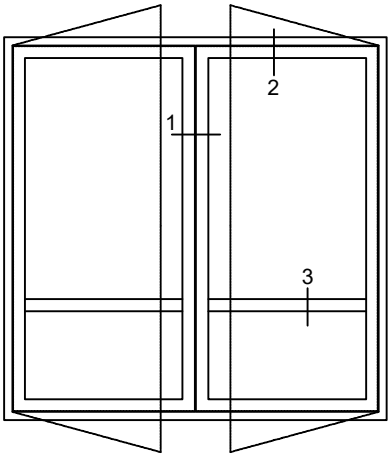

3

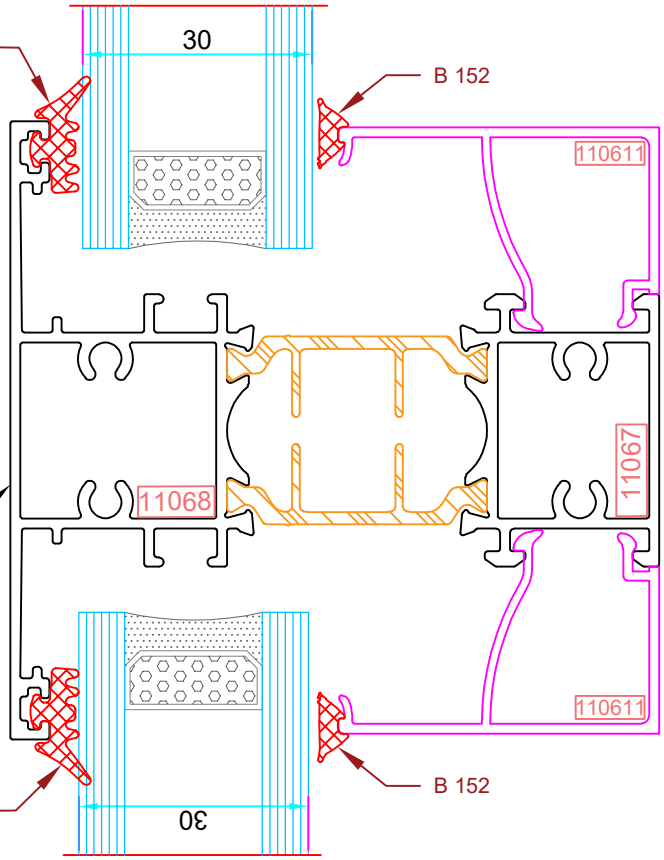

For Sash Type 1

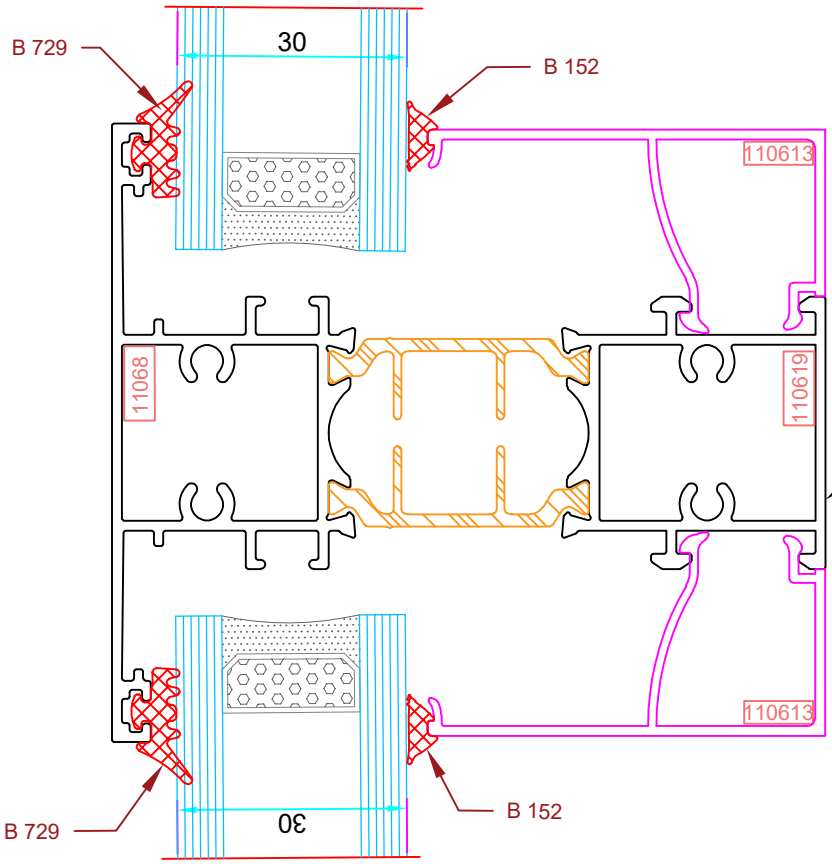

For Sash Type 2

3